YANMAR

PARTS CATALOG

0CD11-M07700EN

Last update Jun., 2010

PREFACE

1. This parts catalog is the 1st edition of 2TNV70-NMB for MAEDA SEISAKUSHO CO.,LTD.

Pub.No. : 0CD11-G07700
Published : June, 2009

2. Model name

Engine model	Vehicle	Vehicle made by
2TNV70-NMB	CRAWLER CRANE	MAEDA SEISAKUSHO CO.,LTD.

Directions for the Parts Catalog.

1.The parts stipulated in this Parts Catalog are not necessarily standard equipped parts.
2.Parts may change without prior notice.
3.The following is an example of the Parts Catalog format.

0CF10-G21601 29. FUEL INJECTION PUMP(W/BOOST)

(A)=4JH-DT
(B)=4JH-DTZ
(C)=4JH-DTZP
(D)=4JH-DTZA
(E)=4JH-DTZY
(F)=

① REF.	② LEV.	PARTS NO.	DESCRIPTION	Q'TY (A)	(B)	(C)	(D)	(E)	(F)	③ I	⑤ R
1	1	729595-51390	FUEL INJECTION PUMP	1	1	1	1	1			1
1-1	1	729595-51391	FUEL INJECTION PUMP	1	1	1	1	1		N	1
	(A=E00185)	(B=E00200)									
3	2	26022-060162	SCREW M 6X 16	9	9	9	9	9			
3-1 ④	2	26022-060162	SCREW M 6X 16	4	4	4	4	4		K	
	(A=E00156)	(B=E00156)	(C=E00156) (D=E00156)	(E=E00156)							
4	2	129470-51040	CAMSHAFT	1	1	1	1	1			
5	2	122710-51050	BEARING, ROLLER	2	2	2	2	2			
6	2	129470-51060	RETAINER	1	1	1	1	1			

Remarks
(1) BOOST COMPEMSATOR TYPE. OPTIONAL
PART, TO E00155,(4JH-DT, 4JH-DTZ

① Ref. No.

The Ref. No. listed may not be in accordance with the illustration Ref. No.

(Ex.) Illustration No. 1 — List Ref No. 1 (Before change) → 1- 1 (After change)

For interchangeable symbols N, R and K, illustrations for new parts may be abbreviated.

② Lev. (Level)

Level indication
The numbers below indicate the level of relativity towards the main part.
1 ----- Main parts (Assembly parts)
2 ----- Sub component included in " 1 ".
3 ----- Sub component included in " 2 ".
Note) Parts that are not for sale are partially illustrated but not listed.

③ Interchangeability Mark

When a part change takes place, one of the following interchangeability symbols is indicated beside the part.

Symbol	Interchangeability	Contents note
N	Old ←Yes / No→ New	New Part is interchangeable for Old Part but Old Part is not interchangeable for New Part.
Q	Old ←No / Yes→ New	New Part is not interchangeable for Old Part but Old Part is interchangeable for New Part.
R	Old ←Yes / Yes→ New	New/ Old Parts are both interchangeable.
S	Old ←No / No→ New	New/ Old Parts are both not interchangeable.
W		Part discontinued.
Z		Part newly added.
F		Not interchangeable by a single part but interchangeable together with related parts.
K		Changes only for used parts quantities.

④ Effective Machine No.

When a part changes, the effective Machine No. will be indicated in the (A)-(F) column.

Product Symbol	Product No.	Product Symbol	Product No.
C	Clutch No. Compressor No.	F	Machine No. (Agricultural Equip.)
D	Drive No.	M	Machine No.
E	Engine No.	Note 1)	Date

Note 1) A date may follow the symbol. (Ex.) 1996.01
Note 2) " XXX " are for parts that could not be predicted or for engine models that could not be identified.
Note 3) (A=E00185) is the E (Engine Serial Number) for the column (A) model (in this case 4JH-DT) after the parts design change.

⑤ Remarks Mark

Figures or alphabets (symbols) are entered in the remarks column.
The comments (remarks) on parts that are indicated at the bottom of the illustration are the same symbols as those stated above.

Contents

0CD11-M07700

Fig. No.	Fig. Name
2TNV70-NMB	
1.	CYLINDER BLOCK
2.	GEAR HOUSING
3.	FLYWHEEL HOUSING & OIL SUMP
4.	CYLINDER HEAD & BONNET
5.	AIR CLEANER
6.	EXHAUST MANIFOLD & SILENCER
7.	CAMSHAFT & DRIVING GEAR
8.	CRANKSHAFT & PISTON
9.	LUB.OIL SYSTEM
10.	COOLING WATER SYSTEM
11.	FUEL INJECTION PUMP
12.	GOVERNOR
13.	FUEL INJECTION VALVE
14.	FUEL FILTER
15.	STARTING MOTOR
16.	GENERATOR
17.	GASKET SET

0CD11-M07700 2TNV70-NMB

Fig.1. CYLINDER BLOCK

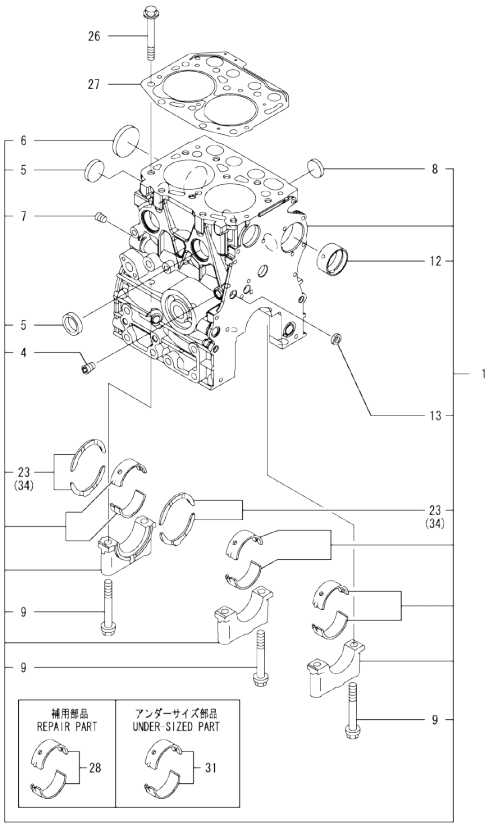

Remarks
(1) REPAIR PART.
(2) UNDER-SIZED(U.S=0.25)PART.
(3) OVER-SIZED(O.S=0.25)PART.

0CD11-M07700 Fig.1

(A)=2TNV70-NMB
(B)=
(C)=
(D)=
(E)=
(F)=

No.	Lev.	Parts No.	Description	Q'ty (A)	(B)	(C)	(D)	(E)	(F)	I	R
1	1	719415-01561	BLOCK ASSY, CYLINDER	1							
4	2	124060-01050	PLUG, PT1/8	1							
5	2	105311-01090	PLUG, 30	3							
6	2	119623-01250	PLUG, 45	1							
7	2	124160-01910	PLUG, PT1/4	1							
8	2	119285-01990	PLUG, 25	2							
9	2	119620-02020	BOLT, METAL CAP	6							
12	2	119717-02411	BUSH, CAMSHAFT	1							
13	2	27241-120000	PLUG, 12	1							
23	2	119717-02930	BEARING, THRUST	2							
26	1	119515-01200	BOLT, HEAD	10							
27	1	119415-01330	GASKET, HEAD	1							
28	1	719717-02901	BEARING, MAIN	3							1
31	1	719717-02911	BEARING, 0.25 US	3							2
34	1	119810-02941	BEARING, THRUST 0.25	2							3

N:Old ←Yes/No→ New. Q:Old ←No/Yes→ New. R:Old ←Yes/Yes→ New. S:Old ←No/No→ New. W:Add. Z:Discontinued. F:Interchangeable by set. K:Q'ty Change

Copyright (C) YANMAR CO., LTD. All RightsReserved.

Fig.2. GEAR HOUSING

(A)=2TNV70-NMB
(B)=
(C)=
(D)=
(E)=
(F)=

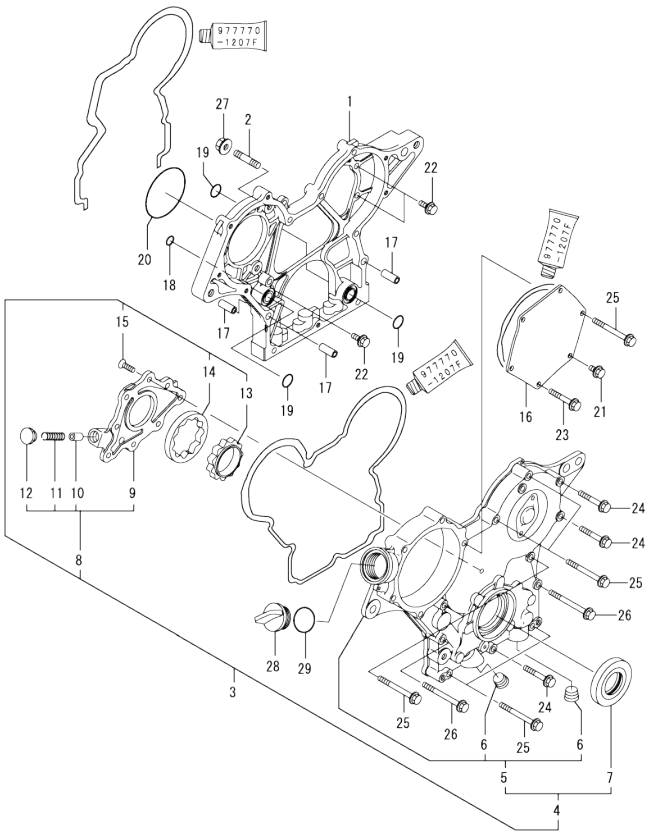

No.	Lev.	Parts No.	Description	Q'ty (A)	(B)	(C)	(D)	(E)	(F)	I	R
1	1	119717-01501	CASE, GEAR	1							
2	1	119717-01570	STUD	3							
3	1	119734-01590	COVER ASSY,GEAR CASE	1							
4	2	719734-01500	COVER ASSY,GEAR CASE	1							
5	3	119717-01521	COVER, GEAR CASE	1							
6	4	23876-030000	PLUG, R03	2							
7	3	119717-01800	SEAL, OIL	1							
8	2	119717-32100	COVER ASSY	1							
9	3	119717-32080	COVER	1							
10	3	129900-32130	VALVE, RELIEF	1							
11	3	129001-32320	SPRING	1							
12	3	129001-32330	PLUG	1							
13	2	119717-32110	ROTOR, INNER	1							
14	2	119717-32120	ROTOR, OUTER	1							
15	2	119802-32130	SCREW, M6X16	8							
16	1	119717-01750	COVER	1							
17	1	119660-01911	PIPE, KNOCK	4							
18	1	119624-32040	O-RING, P12.0	1							
19	1	119717-32050	O-RING, P17.0	3							
20	1	121850-51960	O-RING	1							
21	1	26106-060122	BOLT, M6X 12 PLATED	1							
22	1	26106-060162	BOLT, M6X 16 PLATED	4							
23	1	26106-060402	BOLT, M6X 40 PLATED	4							
24	1	26106-060402	BOLT, M6X 40 PLATED	3							
25	1	26106-060602	BOLT, M6X 60 PLATED	7							
26	1	26106-060652	BOLT, M6X 65 PLATED	2							
27	1	26306-080002	NUT, M8	3							
28	1	124160-01751	COVER, FILLER	1							
29	1	24311-000320	O-RING, 1AP32.0	1							

N:Old ←Yes/No→ New. Q:Old ←No/Yes→ New. R:Old ←Yes/Yes→ New. S:Old ←No/No→ New. W:Add. Z:Discontinued. F:Interchangeable by set. K:Q'ty Change

Copyright (C) YANMAR CO., LTD. All RightsReserved.

Fig.3. FLYWHEEL HOUSING & OIL SUMP

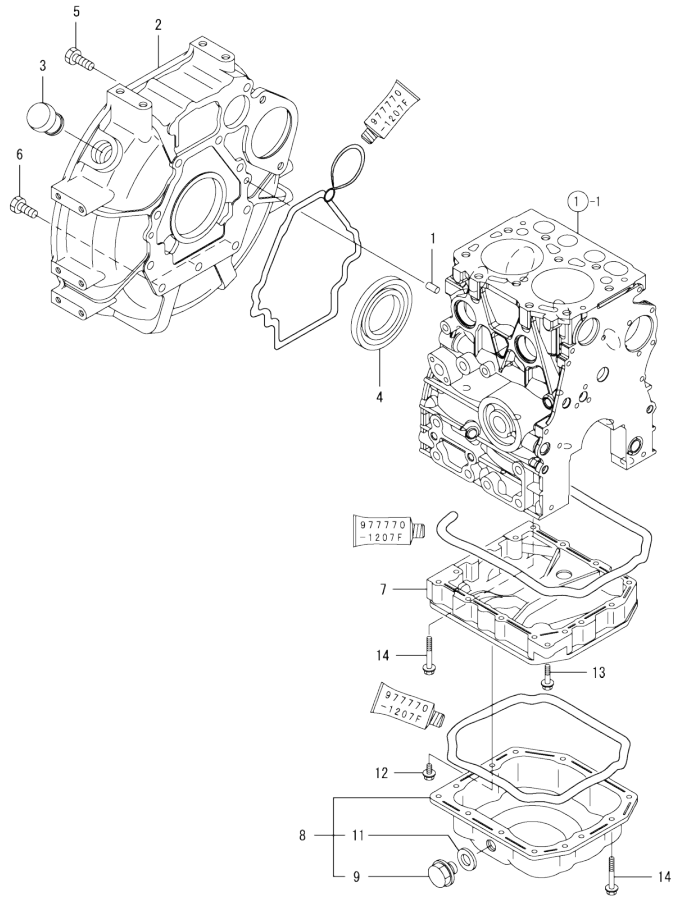

(A)=2TNV70-NMB
(B)=
(C)=
(D)=
(E)=
(F)=

No.	Lev.	Parts No.	Description	Q'ty (A)	(B)	(C)	(D)	(E)	(F)	I	R
1	1	129100-01580	PIN, M8X16	2							
2	1	119515-01601	HOUSING, FLYWHEEL	1							
3	1	119620-01750	CAP	1							
4	1	124085-02220	SEAL, OIL	1							
5	1	26206-100252	BOLT, M10X 25 PLATED	7							
6	1	26206-100302	BOLT, M10X 30 PLATED	3							
7	1	119415-01720	SPACER, OIL SUMP	1							
8	1	119446-01770	SUMP ASSY, OIL	1							
9	2	105425-01690	PLUG, 16	1							
11	2	22190-160002	WASHER, SEAL 16	1							
12	1	26106-060122	BOLT, M6X 12 PLATED	1							
13	1	26106-060252	BOLT, M6X 25 PLATED	1							
14	1	26106-060452	BOLT, M6X 45 PLATED	13							

N:Old ←Yes/No→ New. Q:Old ←No/Yes→ New. R:Old ←Yes/Yes→ New. S:Old ←No/No→ New. W:Add. Z:Discontinued. F:Interchangeable by set. K:Q'ty Change

Copyright (C) YANMAR CO., LTD. All RightsReserved.

Fig.4. CYLINDER HEAD & BONNET

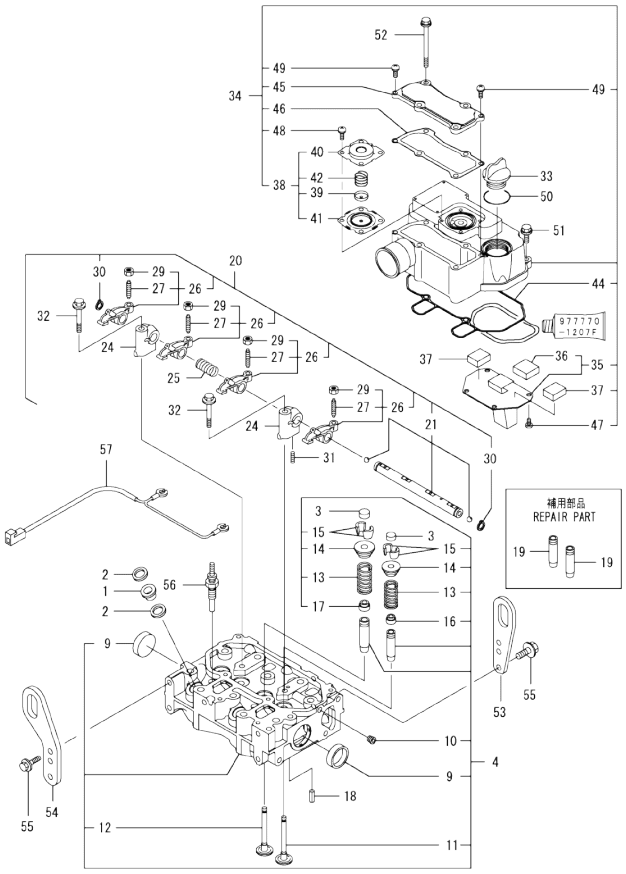

(A)=2TNV70-NMB
(B)=
(C)=
(D)=
(E)=
(F)=

No.	Lev.	Parts No.	Description	Q'ty (A)	(B)	(C)	(D)	(E)	(F)	I	R
1	1	129901-11450	PROTECTOR, NOZZLE	2							
2	1	119600-11460	GASKET, NOZZLE	4							
3	1	105010-11490	CAP, VALVE	4							
4	1	119415-11740	HEAD ASSY, CYLINDER	1							
9	2	119285-11990	PLUG, 35	2							
10	2	23876-005000	PLUG, R005	1							
11	2	119515-11101	VALVE, INTAKE	2							
12	2	119515-11110	VALVE, EXHAUST	2							
13	2	119717-11131	SPRING, VALVE	4							
14	2	129508-11180	RETAINER, SPRING	4							
15	2	119717-11190	COTTER	8							
16	2	119717-11340	SEAL, VALVE STEM	2							
17	2	119717-11350	SEAL, VALVE STEM	2							
18	1	22351-060012	PIN, SPRING 6.0X12	2							
19	1	119515-11800	GUIDE, VALVE	4							1
20	1	119415-11200	SUPPORT ASSY, ARM	1							
21	2	119415-11240	SHAFT ASSY, ROCKER	1							
24	2	119717-11260	SUPPORT, ROCKER ARM	2							
25	2	119515-11280	SPRING	1							
26	2	119717-11650	ARM, ROCKER	4							
27	3	129150-11230	SCREW, VALVE ADJUST	4							
29	3	129150-11750	NUT, M8	4							
30	2	22242-000120	RING, 12	2							
31	2	26979-050162	SCREW, M5X16	1							
32	1	26106-080402	BOLT, M8X 40 PLATED	2							
33	1	124160-01751	COVER, FILLER	1							
34	1	119415-11380	BONNET ASSY, HEAD	1							
35	2	119717-03031	PLATE	1							
36	3	119717-03070	BAFFLE, BREATHER	1							
37	2	119717-03070	BAFFLE, BREATHER	2							
38	2	119802-03100	DIAPHRAGM ASSY	1							
39	3	119802-03110	PLATE	1							
40	3	119802-03121	COVER, DIAPHRAGM	1							
41	3	119802-03131	DIAPHRAGM	1							
42	3	119802-03141	SPRING, DIAPHRAGM	1							
44	2	119415-11310	GASKET, BONNET	1							
45	2	119415-11320	COVER, BONNET	1							
46	2	119415-11330	GASKET	1							
47	2	22857-500100	SCREW, 5X10	4							
48	2	22857-500100	SCREW, 5X10	4							
49	2	22857-500160	SCREW, 5X16	2							
50	1	24311-000320	O-RING, 1AP32.0	1							
51	1	26106-060202	BOLT, M6X 20 PLATED	2							
52	1	26106-060752	BOLT, M6X 75 PLATED	4							
53	1	119226-07900	LIFTER	1							
54	1	129486-07901	LIFTER	1							
55	1	26106-080142	BOLT, M8X 14 PLATED	4							
56	1	119717-77800	PLUG, GLOW	2							
57	1	119415-77820	CONNECTOR, GLOW PLUG	1							

Remarks
(1) REPAIR PART.

N:Old ←Yes/No→ New. Q:Old ←No/Yes→ New. R:Old ←Yes/Yes→ New. S:Old ←No/No→ New. W:Add. Z:Discontinued. F:Interchangeable by set. K:Q'ty Change

Copyright (C) YANMAR CO., LTD. All RightsReserved.

0CD11-M07700 2TNV70-NMB

Fig.5. AIR CLEANER

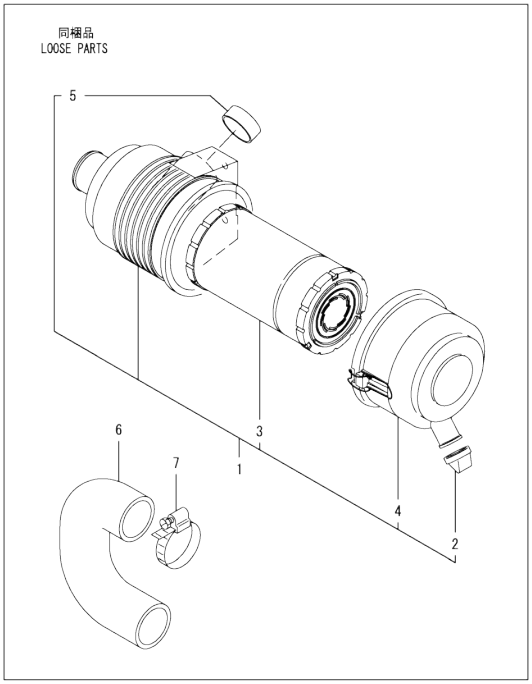

0CD11-M07700 Fig.5

(A)=2TNV70-NMB
(B)=
(C)=
(D)=
(E)=
(F)=

No.	Lev.	Parts No.	Description	Q'ty (A)	(B)	(C)	(D)	(E)	(F)	I	R
1	1	119440-12520	CLEANER ASSY, AIR	1							
2	2	119808-12540	VALVE, UNLOADER	1							
3	2	119655-12560	ELEMENT	1							
4	2	119655-12570	COVER ASSY	1							
5	2	105027-12580	RING	1							
6	1	119631-12650	PIPE, AIR INTAKE	1							
7	1	23000-060000	CLAMP, 60	4							

N:Old $\frac{\text{Yes}}{\text{No}}$ New. Q:Old $\frac{\text{No}}{\text{Yes}}$ New. R:Old $\frac{\text{Yes}}{\text{Yes}}$ New. S:Old $\frac{\text{No}}{\text{No}}$ New. W:Add. Z:Discontinued. F:Interchangeable by set. K:Q'ty Change

Copyright (C) YANMAR CO., LTD. All RightsReserved.

0CD11-M07700 2TNV70-NMB

Fig.6. EXHAUST MANIFOLD & SILENCER

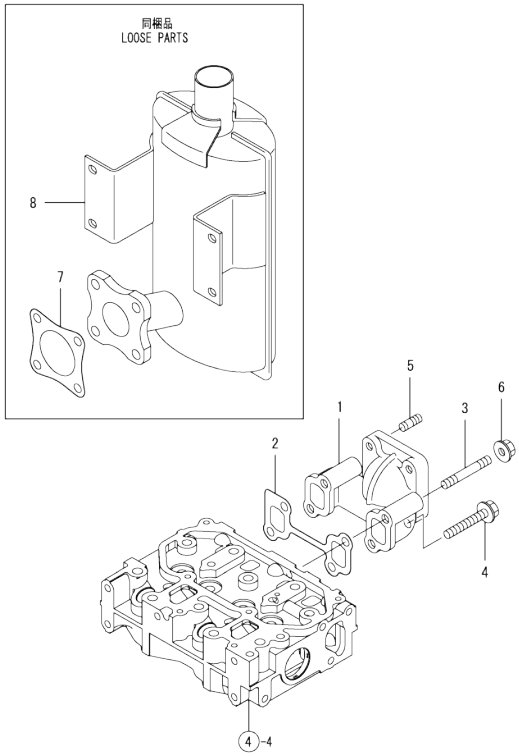

0CD11-M07700 Fig.6

(A)=2TNV70-NMB (D)=
(B)= (E)=
(C)= (F)=

No.	Lev.	Parts No.	Description	Q'ty (A)	(B)	(C)	(D)	(E)	(F)	I	R
1	1	119415-13100	MANIFOLD, EXHAUST	1							
2	1	119415-13110	GASKET	1							
3	1	119717-13600	STUD, M8X50	2							
4	1	119802-13620	BOLT, M8X50	2							
5	1	119131-18320	STUD, M8X22	4							
6	1	26306-080002	NUT, M8	2							
7	1	121000-13201	GASKET, SILENCER	2							
8	1	119325-13500	SILENCER	1							

N:Old ←Yes/No→ New. Q:Old ←No/Yes→ New. R:Old ←Yes/Yes→ New. S:Old ←No/No→ New. W:Add. Z:Discontinued. F:Interchangeable by set. K:Q'ty Change

Copyright (C) YANMAR CO., LTD. All RightsReserved.

Fig.7. CAMSHAFT & DRIVING GEAR

(A)=2TNV70-NMB
(B)=
(C)=
(D)=
(E)=
(F)=

No.	Lev.	Parts No.	Description	Q'ty (A)	(B)	(C)	(D)	(E)	(F)	I	R
1	1	119620-14200	TAPPET	4							
2	1	119515-14400	ROD, PUSH	4							
3	1	119415-14581	CAMSHAFT ASSY	1							
8	1	26106-060122	BOLT, M6X 12 PLATED	2							
9	1	119717-25050	SHAFT, IDLE	1							
10	1	119717-25101	GEAR ASSY, IDLE	1							
13	1	26106-060352	BOLT, M6X 35 PLATED	3							
14	1	119717-25911	BUSH, IDLE GEAR	1							1
15	1	129150-25301	BOLT	4							
16	1	119717-25930	GEAR, PUMP	1							

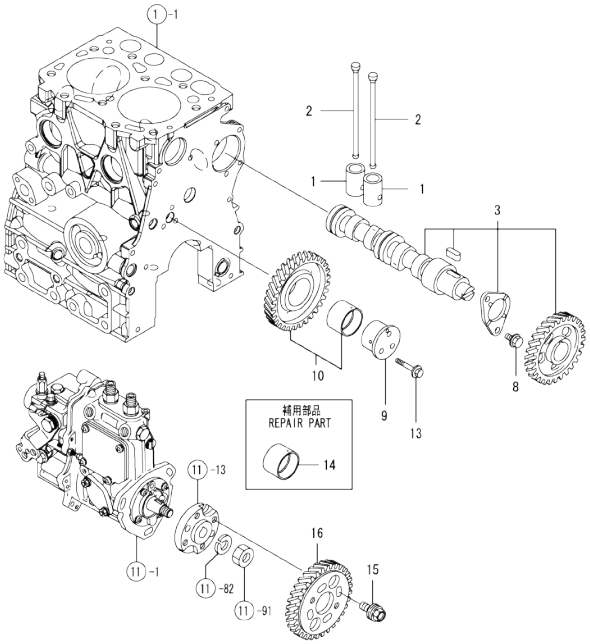

Remarks
(1) REPAIR PART.

N:Old ←Yes/No→ New. Q:Old ←No/Yes→ New. R:Old ←Yes/Yes→ New. S:Old ←No/No→ New. W:Add. Z:Discontinued. F:Interchangeable by set. K:Q'ty Change

Copyright (C) YANMAR CO., LTD. All RightsReserved.

Fig.8. CRANKSHAFT & PISTON

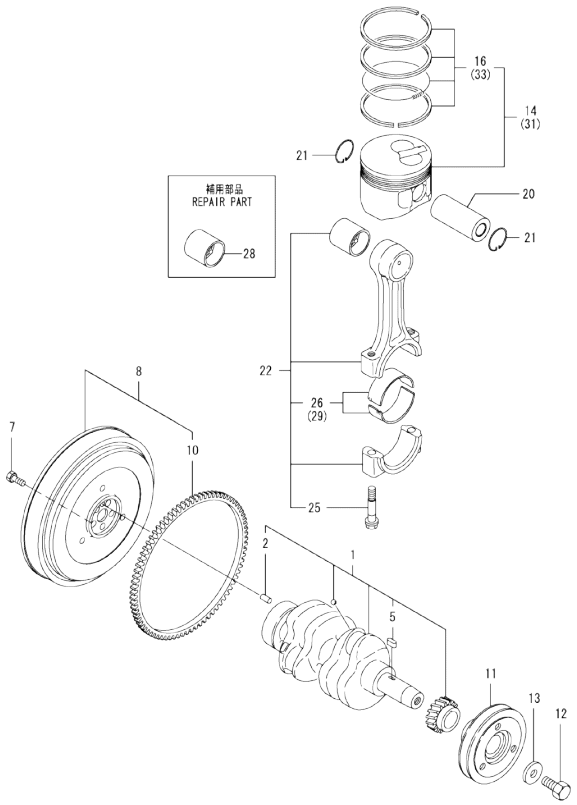

Remarks
(1) REPAIR PART.
(2) UNDER-SIZED(U.S=0.25)PART.
(3) OVER-SIZED(O.S=0.25)PART.

(A)=2TNV70-NMB (D)=
(B)= (E)=
(C)= (F)=

No.	Lev.	Parts No.	Description	Q'ty (A)	(B)	(C)	(D)	(E)	(F)	I	R
1	1	119415-21700	CRANKSHAFT ASSY	1							
2	2	129100-01580	PIN, M8X16	1							
5	2	22512-040120	KEY, 4X 12	1							
7	1	119620-21500	BOLT, FLYWHEEL	5							
8	1	119515-21570	FLYWHEEL ASSY	1							
10	2	124950-21600	GEAR, RING	1							
11	1	119717-21650	V-PULLEY	1							
12	1	119621-21681	BOLT, FLANGE 12X1.25	1							
13	1	119620-21941	WASHER	1							
14	1	119515-22080	PISTON ASSY	2							
16	2	119515-22500	RING SET, PISTON	2							
20	1	119515-22300	PIN, PISTON	2							
21	1	22252-000220	RING, 22	4							
22	1	119515-23000	ROD ASSY, CONNECTING	2							
25	2	119717-23200	BOLT, CONNECTING ROD	4							
26	2	119515-23601	BEARING, CRANK PIN	2							
28	1	119717-23910	BEARING, PISTON PIN	2							1
29	1	119515-23611	METAL ASSY, 0.25	2							2
31	1	119515-22900	PISTON ASSY, 0.25 OS	2							3
33	2	119515-22550	RING SET, 0.25 OS	2							3

N:Old ←Yes/No→ New. Q:Old ←No/Yes→ New. R:Old ←Yes/Yes→ New. S:Old ←No/No→ New. W:Add. Z:Discontinued. F:Interchangeable by set. K:Q'ty Change

Copyright (C) YANMAR CO., LTD. All RightsReserved.

Fig.9. LUB.OIL SYSTEM

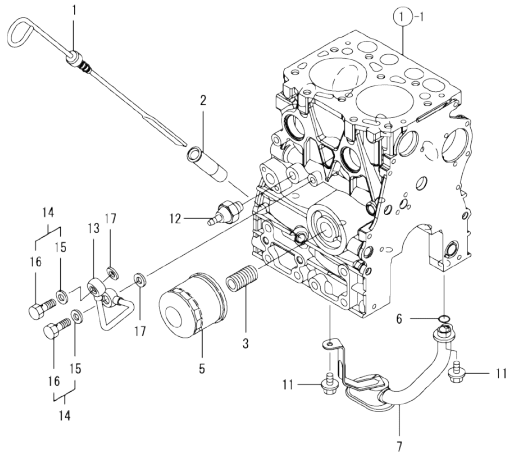

(A)=2TNV70-NMB (D)=
(B)= (E)=
(C)= (F)=

No.	Lev.	Parts No.	Description	Q'ty (A)	(B)	(C)	(D)	(E)	(F)	I	R
1	1	119446-34801	DIPSTICK, OIL	1							
2	1	121520-34810	GUIDE, DIPSTICK	1							
3	1	129100-35140	STUD	1							
5	1	119305-35151	FILTER ASSY, D68XL65	1							1
6	1	119717-32060	O-RING, P15.0	1							
7	1	119446-35080	PIPE ASSY, OIL INLET	1							
11	1	26106-060102	BOLT, M6X 10 PLATED	2							
12	1	114250-39450	SWITCH, 0.5KG	1							
13	1	119415-39211	PIPE, OIL	1							
14	1	129005-59830	BOLT ASSY, JOINT M8	2							
15	2	22190-080002	WASHER, SEAL 6	2							
16	2	23857-030000	BOLT, JOINT 3	2							
17	1	22190-080002	WASHER, SEAL 6	2							

Remarks
(1) REPAIR PART.

N:Old ←Yes/No→ New. Q:Old ←No/Yes→ New. R:Old ←Yes/Yes→ New. S:Old ←No/No→ New. W:Add. Z:Discontinued. F:Interchangeable by set. K:Q'ty Change

Copyright (C) YANMAR CO., LTD. All RightsReserved.

Fig.10. COOLING WATER SYSTEM

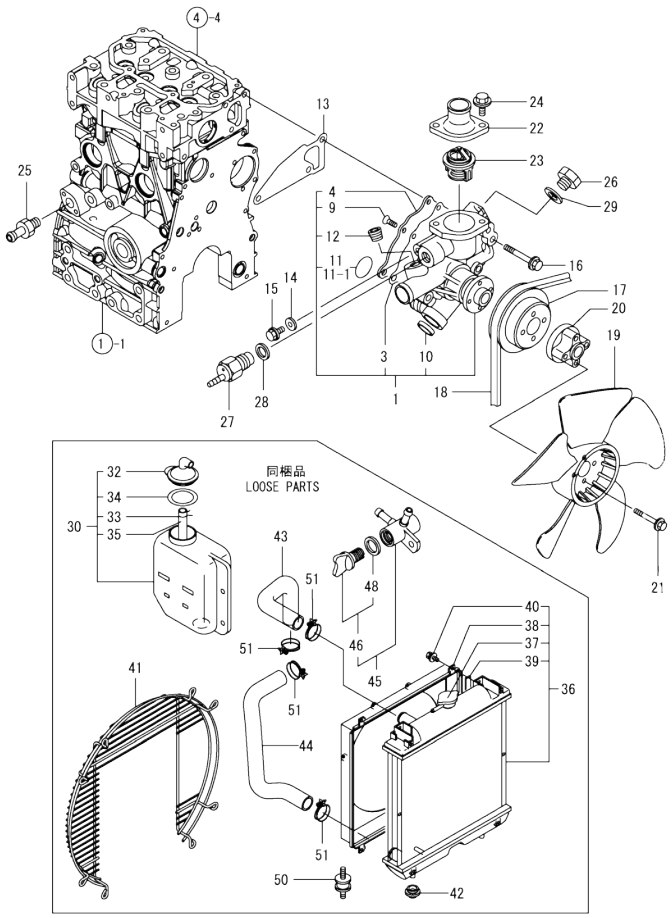

(A)=2TNV70-NMB
(B)=
(C)=
(D)=
(E)=
(F)=

No.	Lev.	Parts No.	Description	Q'ty (A)	(B)	(C)	(D)	(E)	(F)	I	R
1	1	119540-42000	PUMP ASSY, WATER	1							
1-1	1	119C10-42000	PUMP ASSY, WATER	1						N	
	(A=EC0711)										
3	2	119717-42031	GASKET	1							
4	2	119515-42041	COVER	1							
9	2	26577-060122	SCREW, M6X12	4							
10	2	27241-250000	PLUG, 25	1							
11	2	119717-42320	O-RING, P26	1							
11-1	2	119C10-42320	O-RING, 2028	1						S	
	(A=EC0711)										
12	2	129916-49740	PLUG, R3/8	1							
13	1	119515-42020	GASKET, WATER PUMP	1							
14	1	23414-080000	GASKET, 8X1.0	1							
15	1	26106-080122	BOLT, M8X 12 PLATED	1							
16	1	26106-080502	BOLT, M8X 50 PLATED	3							
17	1	119740-42350	V-PULLEY, D=90	1							
18	1	121522-42290	V-BELT, A34.5	1							
19	1	119325-44700	FAN, COOLING D=270	1							
20	1	129457-44760	SPACER, FAN	1							
21	1	26106-060452	BOLT, M6X 45 PLATED	4							
22	1	129350-49530	COVER, THERMOSTAT	1							
23	1	119717-49800	THERMOSTAT, 71C	1							
24	1	26106-080202	BOLT, M8X 20 PLATED	2							
25	1	121550-49111	JOINT, PT1/4	1							
26	1	121450-42450	PLUG, M16	1							
27	1	121250-44901	SWITCH, THERMO 110	1							
28	1	124465-44950	GASKET, 16	1							
29	1	124465-44950	GASKET, 16	1							
30	1	121468-44520	TANK ASSY, SUB	1							
32	2	121450-44531	CAP	1							
33	2	124450-44560	CLAMP, HOSE	1							
34	2	121470-44581	GASKET	1							
35	2	23065-070130	PIPE, 7X 130	1							
36	1	119515-44540	RADIATOR	1							
37	2	129107-44590	CAP, RADIATOR	1							
38	2	119415-44600	SHROUD	1							
39	2	119515-44610	GASKET	2							
40	2	26014-060122	BOLT, M6X 12	4							
41	1	119802-44570	GUARD, FAN	1							
42	1	119255-44660	ABSORBER	2							
43	1	119802-49010	HOSE, WATER	1							
44	1	119940-49020	PIPE, WATER	1							
45	1	129150-49100	COCK ASSY, 3-WAY	1							
46	2	129150-49080	COCK, DRAIN	1							
48	3	119629-49080	GASKET	1							
50	1	127694-91050	ABSORBER, SHOCK	2							
51	1	23010-038000	CLAMP, 38	4							

N:Old ←Yes/No→ New. Q:Old ←No/Yes→ New. R:Old ←Yes/Yes→ New. S:Old ←No/No→ New. W:Add. Z:Discontinued. F:Interchangeable by set. K:Q'ty Change

Copyright (C) YANMAR CO., LTD. All RightsReserved.

Fig.11. FUEL INJECTION PUMP

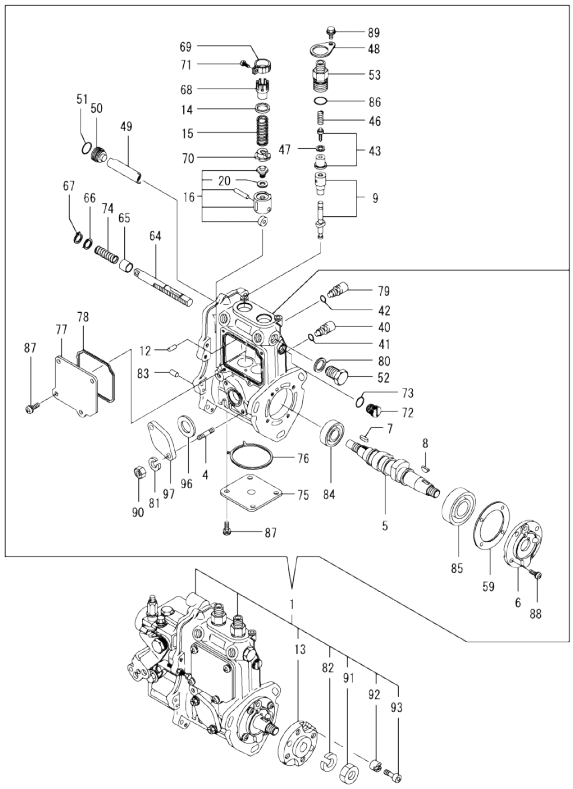

Remarks
(1) GOVERNOR ASSY(FIG.12) IS INCORPORATED IN THIS FUEL INJECTION PUMP (REF.NO.1).

(A)=2TNV70-NMB (D)=
(B)= (E)=
(C)= (F)=

No.	Lev.	Parts No.	Description	Q'ty (A)	(B)	(C)	(D)	(E)	(F)	I	R
1	1	719440-51450	PUMP ASSY, INJECTION	1							1
4	2	129155-51020	STUD	2							
5	2	119415-51030	CAMSHAFT	1							
6	2	119717-51060	SUPPORT, CAMSHAFT	1							
7	2	119717-51070	KEY	1							
8	2	122710-51090	KEY	1							
9	2	119515-51100	PLUNGER ASSY	2							
12	2	129155-51140	PIN	2							
13	2	119717-51150	FLANGE	1							
14	2	158600-51170	RETAINER, SPRING	2							
15	2	119717-51190	SPRING, PLUNGER	2							
16	2	119717-51200	TAPPET ASSY	2							
20	3	129155-51600	SHIM SET, ADJUSTING	2							
40	2	158600-51270	STOPPER, TAPPET	2							
41	2	129155-51280	O-RING, S6	2							
42	2	129155-51280	O-RING, S6	1							
43	2	119717-51300	VALVE ASSY, DELIVERY	2							
46	2	119717-51330	SPRING, DELIVERY	2							
47	2	124550-51350	GASKET, DELIVERY	2							
48	2	118400-51370	LOCKING	2							
49	2	119415-51400	PROTECTOR	1							
50	2	158600-51410	PLUG, DEFLECTOR	1							
51	2	119717-51420	O-RING	1							
52	2	158600-51420	PLUG, DEFLECTOR	1							
53	2	158600-51442	VALVE ASSY, DELIVERY	2							
59	2	129155-51450	SHIM SET, ADJUSTING	1							
64	2	119415-51500	RACK, CONTROL	1							
65	2	129155-51521	BUSH, RACK	1							
66	2	129155-51530	SPACER	1							
67	2	129155-51540	CIRCLIP	1							
68	2	129155-51550	PINION, CONTROL	2							
69	2	129100-51560	PINION	2							
70	2	119717-51570	RETAINER, SPRING	2							
71	2	129100-51570	SCREW	2							
72	2	158600-51570	PLUG	1							
73	2	129155-51580	O-RING	1							
74	2	129155-51591	SPRING, RACK	1							
75	2	119415-51700	COVER	1							
76	2	119415-51710	GASKET	1							
77	2	119415-51750	COVER	1							
78	2	119415-51760	GASKET	1							
79	2	158600-51790	STOOPER, RACK	1							
80	2	22190-160002	WASHER, SEAL 16	1							
81	2	22217-060000	WASHER, SPRING 6	2							
82	2	22217-120000	WASHER, SPRING 12	1							
83	2	22351-050010	PIN, SPRING 5.0X10	2							
84	2	24101-060034	BEARING, BALL 6003	1							
85	2	24101-063034	BEARING, BALL 6303	1							
86	2	24316-000150	O-RING, 4DP15.0	2							
87	2	26022-050122	SCREW, M5X12	8							
88	2	26022-060162	SCREW, M6X16	4							

N:Old ←Yes/No→ New. Q:Old ←No/Yes→ New. R:Old ←Yes/Yes→ New. S:Old ←No/No→ New. W:Add. Z:Discontinued. F:Interchangeable by set. K:Q'ty Change

++ CONTINUE ++

Copyright (C) YANMAR CO., LTD. All RightsReserved.

Fig.11. FUEL INJECTION PUMP

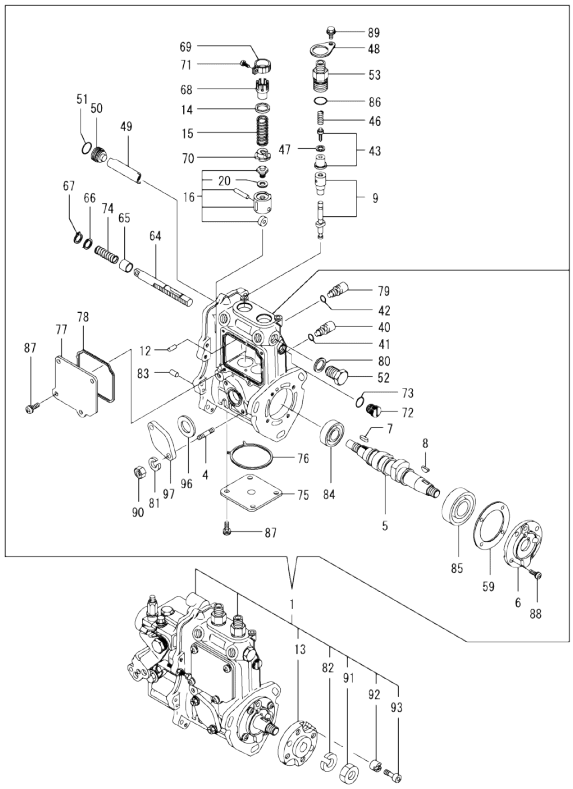

Remarks
(1) GOVERNOR ASSY(FIG.12) IS INCORPORATED IN THIS FUEL INJECTION PUMP (REF.NO.1).

(A)=2TNV70-NMB (D)=
(B)= (E)=
(C)= (F)=

No.	Lev.	Parts No.	Description	Q'ty (A)	(B)	(C)	(D)	(E)	(F)	I	R
89	2	26106-050102	BOLT, M5X 10 PLATED	2							
90	2	26716-060002	NUT, M6	2							
91	2	26716-120002	NUT, M12	1							
92	2	119717-51480	COLLAR	1							
93	2	119717-51490	BOLT	1							
96	2	129155-52051	GASKET	1							
97	2	129100-52200	COVER	1							

N:Old ←Yes/No→ New. Q:Old ←No/Yes→ New. R:Old ←Yes/Yes→ New. S:Old ←No/No→ New. W:Add. Z:Discontinued. F:Interchangeable by set. K:Q'ty Change

Copyright (C) YANMAR CO., LTD. All RightsReserved.

Fig.12. GOVERNOR

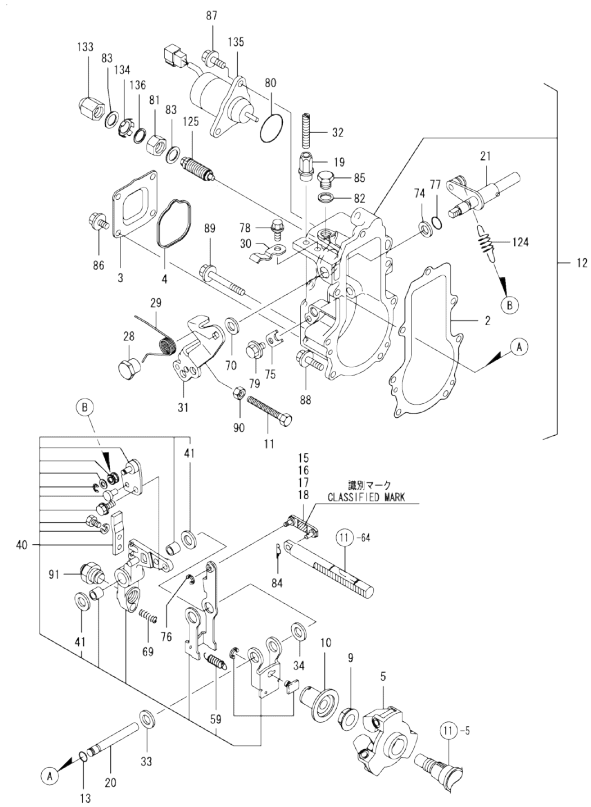

Remarks
* THIS FIGURE(GOVERNOR ASSY)IS INCORPORATED IN THE FUEL INJECTION PUMP ASSY (FIG.11).
(1) SELECTIVE PARTS;CERTAIN THE CLASSIFICATION MARK,THEN PLACE YOUR ORDER (REF.TO ILLUSTRATION).

(A)=2TNV70-NMB (D)=
(B)= (E)=
(C)= (F)=

No.	Lev.	Parts No.	Description	Q'ty (A)	(B)	(C)	(D)	(E)	(F)	I	R
2	2	119717-61050	GASKET	1							
3	2	119717-61060	COVER, GOVERNOR CASE	1							
4	2	119717-61070	GASKET	1							
5	2	119717-61201	WEIGHT ASSY,GOVERNOR	1							
9	2	129008-61301	NUT	1							
10	2	129155-61341	SLEEVE	1							
11	2	129155-61460	BOLT, IDLE	1							
12	2	119440-61600	CASE ASSY, GOVERNOR	1							
13	3	129155-51280	O-RING, S6	1							
15	3	119717-61120	LINK, MARK :3	1							1
16	3	119717-61130	LINK, MARK 98	1							1
17	3	119717-61140	LINK, MARK 88	1							1
18	3	119717-61150	LINK, MARK 03	1							1
19	3	129209-61370	NUT, M6	1							
20	3	129052-61390	SHAFT	1							
21	3	119717-61400	SHAFT ASSY	1							
28	3	129255-61410	NUT, LOCK	1							
29	3	119534-61420	SPRING	1							
30	3	119534-61430	RETAINER	1							
31	3	119718-61441	LEVER, CONTROL	1							
32	3	129155-61450	BOLT, LIMITER	1							
33	3	129156-61460	SHIM, T=0.6	1							
34	3	129155-61480	SPACER ASSY	1							
40	3	119717-61500	LEVER ASSY, GOVERNOR	1							
41	4	174307-51700	SHIM SET	2							
59	4	129486-61540	SPRING, SET	1							
69	3	129100-61650	SPRING, CONTROLLER	1							
70	3	158552-61700	SHIM SET	1							
74	3	158552-61710	SHIM, T=1.0	1							
75	3	119660-61901	RETAINER, SHAFT	1							
76	3	22272-000030	RING, E- 3	1							
77	3	24341-000070	O-RING, 1AS7.0	1							
78	3	26106-060102	BOLT, M6X 10 PLATED	1							
79	3	26106-060102	BOLT, M6X 10 PLATED	1							
80	2	158552-61900	O-RING	1							
81	2	129209-61920	NUT, ARB	1							
82	2	22190-100002	WASHER, SEAL 10	1							
83	2	22190-120002	WASHER, SEAL 12	2							
84	2	22372-040000	PIN, SNAP 4	1							
85	2	23887-100002	PLUG, 10	1							
86	2	26106-060102	BOLT, M6X 10 PLATED	4							
87	2	26106-060142	BOLT, M6X 14 PLATED	2							
88	2	26106-060202	BOLT, M6X 20 PLATED	4							
89	2	26106-060452	BOLT, M6X 45 PLATED	3							
90	2	26756-060002	NUT, LOCK M6	1							
91	2	119740-61560	ANGLEICH ASSY	1							
124	2	119718-61700	SPRING, GOVERNOR	1							
125	2	158601-61710	LIMITER ASSY, FUEL	1							
133	2	129209-61930	NUT, CAP	1							
134	2	129209-61970	PLATE	1							
135	2	119233-77932	SOLENOID, STOP	1							

N:Old ←Yes/No→ New. Q:Old ←No/Yes→ New. R:Old ←Yes/Yes→ New. S:Old ←No/No→ New. W:Add. Z:Discontinued. F:Interchangeable by set. K:Q'ty Change

++ CONTINUE ++

Copyright (C) YANMAR CO., LTD. All RightsReserved.

Fig.12. GOVERNOR

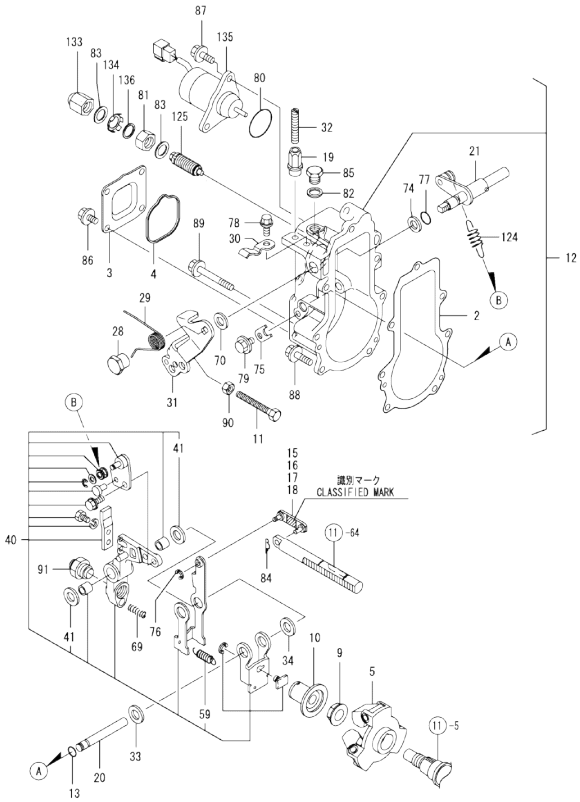

Remarks
* THIS FIGURE(GOVERNOR ASSY)IS INCORPORATED IN THE FUEL INJECTION PUMP ASSY (FIG.11).
(1) SELECTIVE PARTS;CERTAIN THE CLASSIFICATION MARK,THEN PLACE YOUR ORDER (REF.TO ILLUSTRATION).

(A)=2TNV70-NMB (D)=
(B)= (E)=
(C)= (F)=

No.	Lev.	Parts No.	Description	Q'ty (A)	(B)	(C)	(D)	(E)	(F)	I	R
136	2	23414-120016	GASKET, 12X1.0	1							

N:Old ←Yes/No→ New. Q:Old ←No/Yes→ New. R:Old ←Yes/Yes→ New. S:Old ←No/No→ New. W:Add. Z:Discontinued. F:Interchangeable by set. K:Q'ty Change

Copyright (C) YANMAR CO., LTD. All RightsReserved.

Fig.13. FUEL INJECTION VALVE

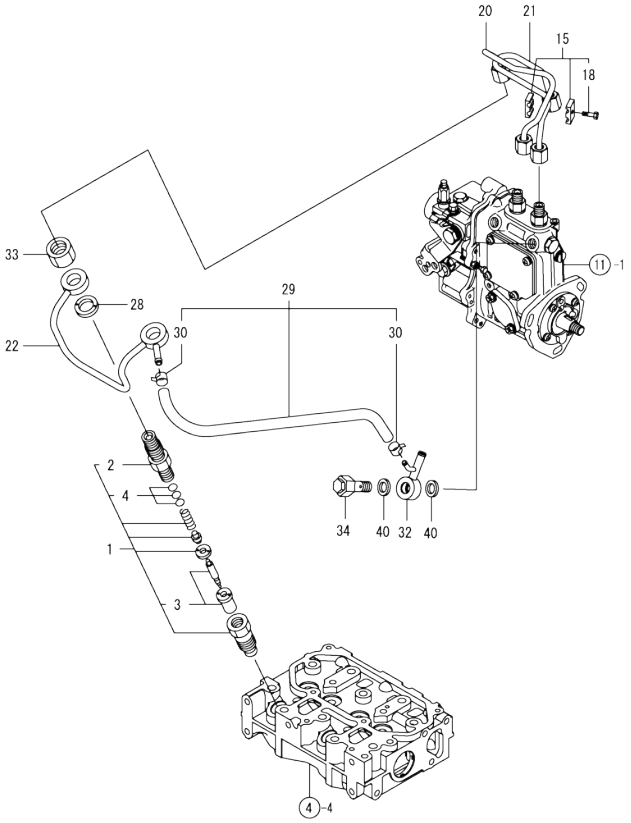

(A)=2TNV70-NMB (D)=
(B)= (E)=
(C)= (F)=

No.	Lev.	Parts No.	Description	Q'ty (A)	(B)	(C)	(D)	(E)	(F)	I	R
1	1	119515-53001	VALVE ASSY,INJECTION	2							
2	2	118200-53010	HOLDER, NOZZLE	2							
3	2	119515-53010	VALVE ASSY,INJECTION	2							
4	2	129901-53800	SHIM SET, ADJUSTING	2							
15	1	119305-59120	RETAINER, PIPE	1							
18	2	129150-59131	BOLT, M4X14	1							
20	1	119415-59810	PIPE ASSY, INJECTION	1							
21	1	119415-59820	PIPE ASSY, INJECTION	1							
22	1	119415-59540	PIPE ASSY, RETURN	1							
28	1	129901-59560	GASKET	2							
29	1	119540-59570	PIPE ASSY, RETURN	1							
30	2	124066-59100	CLIP, HOSE 8	2							
32	1	119840-59570	JOINT	1							
33	1	119620-59700	NUT, NOZZLE	2							
34	1	119813-59950	VALVE ASSY, CHECK	1							
40	1	22190-120002	WASHER, SEAL 12	2							

N:Old ◄Yes/No► New. Q:Old ◄No/Yes► New. R:Old ◄Yes/Yes► New. S:Old ◄No/No► New. W:Add. Z:Discontinued. F:Interchangeable by set. K:Q'ty Change

Copyright (C) YANMAR CO., LTD. All RightsReserved.

Fig.14. FUEL FILTER

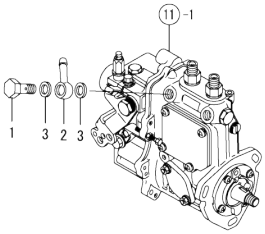

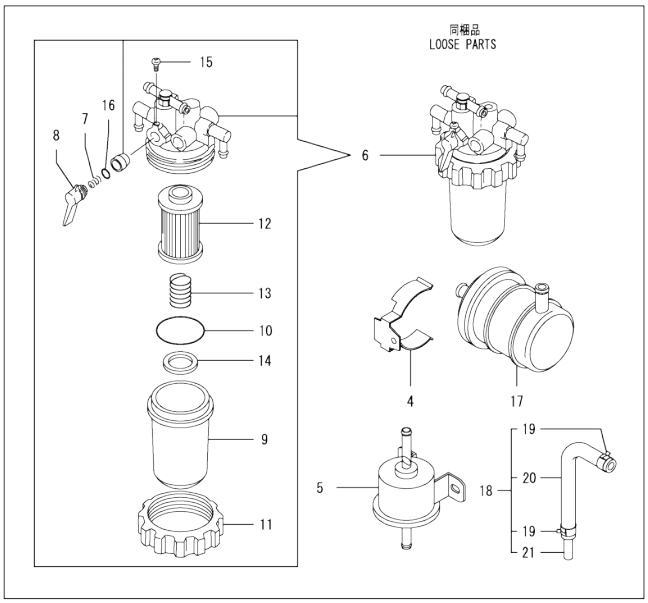

(A)=2TNV70-NMB (D)=
(B)= (E)=
(C)= (F)=

No.	Lev.	Parts No.	Description	Q'ty (A)	(B)	(C)	(D)	(E)	(F)	I	R
1	1	103854-39140	BOLT, PIPE JOINT	1							
2	1	101304-59020	JOINT, PIPE 12	1							
3	1	22190-120002	WASHER, SEAL 12	2							
4	1	198072-04320	CLAMP, FILTER	1							
5	1	119225-52102	PUMP ASSY, FUEL FEED	1							
6	1	129053-55620	FILTER ASSY, FUEL	1							
7	2	104200-55330	SPRING, VALVE	1							
8	2	119810-55340	LEVER	1							
9	2	129107-55510	CUP, STRAINER	1							
10	2	102103-55520	O-RING	1							
11	2	110250-55610	RING, RETAINING	1							
12	2	119810-55650	ELEMENT	1							
13	2	121257-55720	SPRING	1							
14	2	121257-55731	FLOAT	1							
15	2	104200-55750	SCREW, M4	1							
16	2	24311-240100	O-RING, 1AP10A	1							
17	1	129052-55630	FILTER, FUEL	1							
18	1	119840-59601	BEND	1							
19	2	124766-59050	CLIP, HOSE 12	2							
20	2	119840-59611	BEND	1							
21	2	119840-59621	JOINT	1							

N:Old ←Yes/No→ New. Q:Old ←No/Yes→ New. R:Old ←Yes/Yes→ New. S:Old ←No/No→ New. W:Add. Z:Discontinued. F:Interchangeable by set. K:Q'ty Change

Copyright (C) YANMAR CO., LTD. All RightsReserved.

Fig.15. STARTING MOTOR

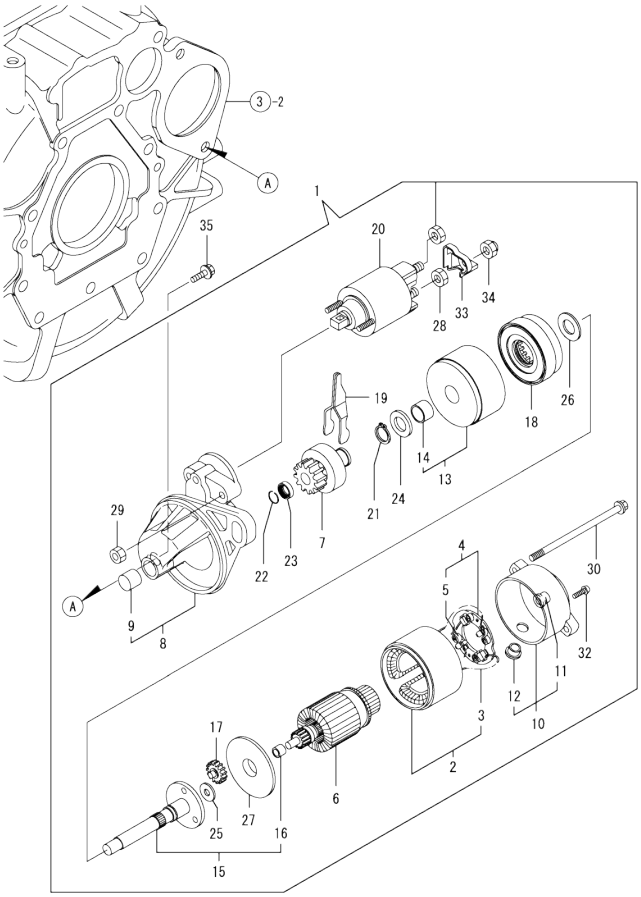

(A)=2TNV70-NMB
(B)=
(C)=
(D)=
(E)=
(F)=

No.	Lev.	Parts No.	Description	Q'ty (A)	(B)	(C)	(D)	(E)	(F)	I	R
1	1	119515-77010	STARTER, P1.1	1							
2	2	X0281007680	YOKE ASSY	1							
3	3	X0280996180	STARTER KIT	2							
4	2	X0285105190	HOLDER ASSY	1							
5	3	X0285205030	SPRING	4							
6	2	X0282005871	ARMATURE ASSY	1							
7	2	X0283006960	CLUTCH ASSY	1							
8	2	X4284001590	HOUSING ASSY,STARTER	1							
9	3	X9491050100	BEARING, NEEDLE	1							
10	2	X0285007030	FRAME ASSY.	1							
11	3	X9491040990	BEARING	1							
12	3	X0280626010	COVER	1							
13	2	X0284105040	BEARING ASSY	1							
14	3	X9491034330	BEARING	1							
15	2	X0286105010	SHAFT ASSY	1							
16	3	X9491034320	BEARING	1							
17	2	X0286305010	GEAR	3							
18	2	X0286355010	GEAR	1							
19	2	X0287405140	LEVER	1							
20	2	X0534007800	SWITCH ASSY	1							
21	2	X9055715000	RING	1							
22	2	X9490721360	RING	1							
23	2	X0280210331	NUT	1							
24	2	X9490138110	WASHER	1							
25	2	X9490138090	WASHER	1							
26	2	X9490138100	WASHER	1							
27	2	X0284525010	PLATE	1							
28	2	X9490562360	NUT	1							
29	2	X9490560750	NUT	2							
30	2	X9490423520	BOLT, THROUGH	2							
32	2	X9490065670	SCREW, M4X6	2							
33	2	X0280335360	COVER, TERMINAL	1							
34	2	X1289510130	NUT	1							
35	1	26106-100252	BOLT, M10X 25 PLATED	2							

N:Old ←Yes/No→ New. Q:Old ←No/Yes→ New. R:Old ←Yes/Yes→ New. S:Old ←No/No→ New. W:Add. Z:Discontinued. F:Interchangeable by set. K:Q'ty Change

Copyright (C) YANMAR CO., LTD. All RightsReserved.

0CD11-M07700 2TNV70-NMB

Fig.16. GENERATOR

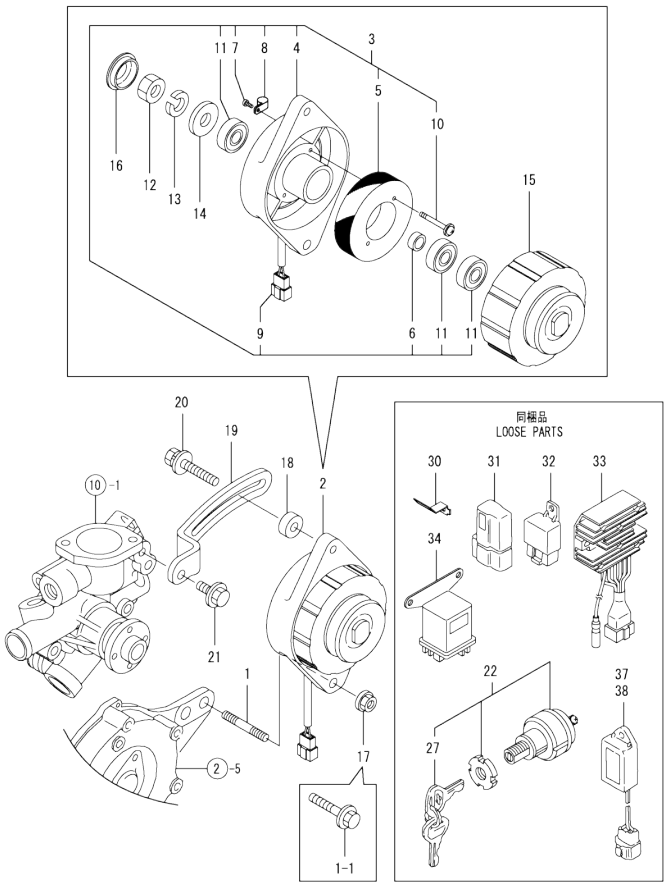

0CD11-M07700 Fig.16

(A)=2TNV70-NMB (D)=
(B)= (E)=
(C)= (F)=

No.	Lev.	Parts No.	Description	Q'ty (A)	(B)	(C)	(D)	(E)	(F)	I	R
1	1	129795-01900	STUD	1							
1-1	1	26106-100452	BOLT, M10X 45 PLATED	1						N	
	(A=FROM 1ST)										
2	1	119910-77200	DYNAMO ASSY	1							
3	2	X2A10592KA	PLATE ASSY	1							
4	3	X2A07075KB	PLATE, COIL	1							
5	3	X3A02982KC	STATOR ASSY	1							
6	3	X4A10092KA	COLLAR	1							
7	3	XYSPS400800	SCREW	1							
8	3	XM069000000	CLAMP	1							
9	3	XM771860000	COUPLER	1							
10	3	119259-77250	SCREW, WASHER SET	2							
11	3	24104-062010	BEARING, 6201UUC3	3							
12	2	XM863720000	NUT	1							
13	2	XM219230000	WASHER, SPRING	1							
14	2	XM860250000	WASHER, PLAIN	1							
15	2	X3A08863KA	FLYWHEEL ASSY	1							
16	2	XM771870000	CAP	1							
17	1	26306-100002	NUT, M10	1						Z	
	(A=FROM 1ST)										
18	1	119940-77270	SPACER, GENERATOR	1							
19	1	119734-77330	ADJUSTER	1							
20	1	129972-77341	BOLT, ADJUSTER L=50	1							
21	1	26106-080202	BOLT, M8X 20 PLATED	1							
22	1	194215-52110	SWITCH, STARTING	1							
27	2	194155-52160	KEY ASSY	1							
30	1	129136-66852	SUPPORT	1							
31	1	119643-66900	DIODE	1							
32	1	119247-77100	RELAY, SAFETY	1							
33	1	119653-77711	LIMITER, CURRENT	1							
34	1	119650-77910	RELAY ASSY, GLOW	2							
37	1	129155-77925	TIMER	1							
38	1	129211-77920	TIMER	1							

N:Old ←Yes/No→ New. Q:Old ←No/Yes→ New. R:Old ←Yes/Yes→ New. S:Old ←No/No→ New. W:Add. Z:Discontinued. F:Interchangeable by set. K:Q'ty Change

Copyright (C) YANMAR CO., LTD. All RightsReserved.

Fig.17. GASKET SET

(A)=2TNV70-NMB
(B)=
(C)=
(D)=
(E)=
(F)=

No.	Lev.	Parts No.	Description	Q'ty (A)	(B)	(C)	(D)	(E)	(F)	I	R
1	1	719415-92740	GASKET SET	1							1
2	2	119415-01330	GASKET, HEAD	1							
3	2	119624-32040	O-RING, P12.0	1							
4	2	119717-32050	O-RING, P17.0	3							
5	2	121850-51960	O-RING	1							
6	2	24311-000320	O-RING, 1AP32.0	2							
7	2	22190-160002	WASHER, SEAL 16	1							
8	2	129901-11450	PROTECTOR, NOZZLE	2							
9	2	119600-11460	GASKET, NOZZLE	4							
10	2	119717-11340	SEAL, VALVE STEM	2							
11	2	119717-11350	SEAL, VALVE STEM	2							
12	2	119415-11310	GASKET, BONNET	1							
13	2	119415-11330	GASKET	1							
14	2	119415-13110	GASKET	1							
15	2	121000-13201	GASKET, SILENCER	2							
16	2	119717-32060	O-RING, P15.0	1							
17	2	22190-080002	WASHER, SEAL 6	4							
18	2	119515-42020	GASKET, WATER PUMP	1							
19	2	23414-080000	GASKET, 8X1.0	1							
20	2	124465-44950	GASKET, 16	2							
21	2	129901-59560	GASKET	2							
22	2	22190-120002	WASHER, SEAL 12	4							
23	1	129400-92410	FLEX HORN	1							1
24	1	977770-1207F	GASKET.LIQUID	1							1
25	1	119332-92751	WRENCH, FILTER 68	1							
26	1	171051-92760	WRENCH, STRAINER	1							

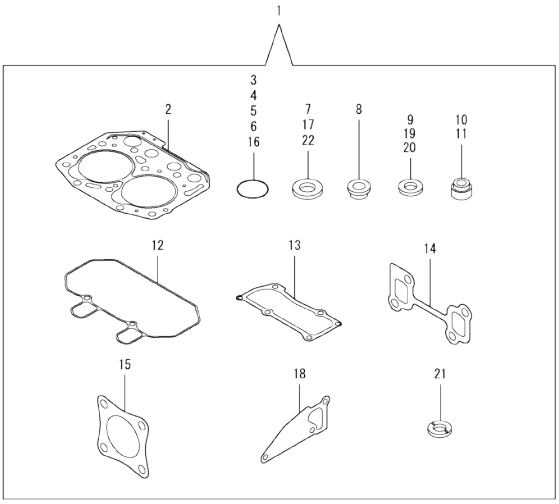

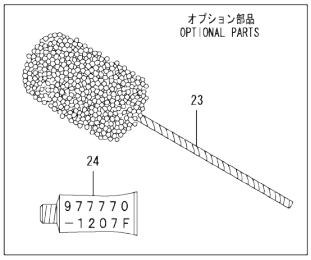

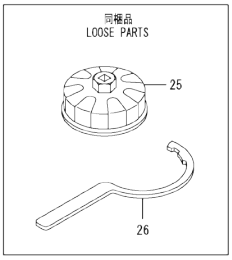

Remarks
(1) OPTIONAL PART.

N:Old ←Yes/No→ New. Q:Old ←No/Yes→ New, R:Old ←Yes/Yes→ New, S:Old ←No/No→ New. W:Add. Z:Discontinued. F:Interchangeable by set. K:Q'ty Change

Copyright (C) YANMAR CO., LTD. All RightsReserved.

Parts No. Index

Parts No.	Fig. No.	Ref. No.
101304-59020	14	2
102103-55520	14	10
103854-39140	14	1
104200-55330	14	7
104200-55750	14	15
105010-11490	4	3
105027-12580	5	5
105311-01090	1	5
105425-01690	3	9
110250-55610	14	11
114250-39450	9	12
118200-53010	13	2
118400-51370	11	48
119131-18320	6	5
119225-52102	14	5
119226-07900	4	53
119233-77932	12	135
119247-77100	16	32
119255-44660	10	42
119259-77250	16	10
119285-01990	1	8
119285-11990	4	9
119305-35151	9	5
119305-59120	13	15
119325-13500	6	8
119325-44700	10	19
119332-92751	17	25
119415-01330	1	27
	17	2
119415-01720	3	7
119415-11200	4	20
119415-11240	4	21
119415-11310	4	44
	17	12
119415-11320	4	45
119415-11330	4	46
	17	13
119415-11380	4	34
119415-11740	4	4
119415-13100	6	1
119415-13110	6	2
	17	14
119415-14581	7	3
119415-21700	8	1
119415-39211	9	13
119415-44600	10	38
119415-51030	11	5
119415-51400	11	49
119415-51500	11	64
119415-51700	11	75

Parts No.	Fig. No.	Ref. No.
119415-51710	11	76
119415-51750	11	77
119415-51760	11	78
119415-59540	13	22
119415-59810	13	20
119415-59820	13	21
119415-77820	4	57
119440-12520	5	1
119440-61600	12	12
119446-01770	3	8
119446-34801	9	1
119446-35080	9	7
119515-01200	1	26
119515-01601	3	2
119515-11101	4	11
119515-11110	4	12
119515-11280	4	25
119515-11800	4	19
119515-14400	7	2
119515-21570	8	8
119515-22080	8	14
119515-22300	8	20
119515-22500	8	16
119515-22550	8	33
119515-22900	8	31
119515-23000	8	22
119515-23601	8	26
119515-23611	8	29
119515-42020	10	13
	17	18
119515-42041	10	4
119515-44540	10	36
119515-44610	10	39
119515-51100	11	9
119515-53001	13	1
119515-53010	13	3
119515-77010	15	1
119534-61420	12	29
119534-61430	12	30
119540-42000	10	1
119540-59570	13	29
119600-11460	4	2
	17	9
119620-01750	3	3
119620-02020	1	9
119620-14200	7	1
119620-21500	8	7
119620-21941	8	13
119620-59700	13	33
119621-21681	8	12

Parts No.	Fig. No.	Ref. No.
119623-01250	1	6
119624-32040	2	18
	17	3
119629-49080	10	48
119631-12650	5	6
119643-66900	16	31
119650-77910	16	34
119653-77711	16	33
119655-12560	5	3
119655-12570	5	4
119660-01911	2	17
119660-61901	12	75
119717-01501	2	1
119717-01521	2	5
119717-01570	2	2
119717-01750	2	16
119717-01800	2	7
119717-02411	1	12
119717-02930	1	23
119717-03031	4	35
119717-03070	4	36
		37
119717-11131	4	13
119717-11190	4	15
119717-11260	4	24
119717-11340	4	16
	17	10
119717-11350	4	17
	17	11
119717-11650	4	26
119717-13600	6	3
119717-21650	8	11
119717-23200	8	25
119717-23910	8	28
119717-25050	7	9
119717-25101	7	10
119717-25911	7	14
119717-25930	7	16
119717-32050	2	19
	17	4
119717-32060	9	6
	17	16
119717-32080	2	9
119717-32100	2	8
119717-32110	2	13
119717-32120	2	14
119717-42031	10	3
119717-42320	10	11
119717-49800	10	23
119717-51060	11	6

Parts No.	Fig. No.	Ref. No.
119717-51070	11	7
119717-51150	11	13
119717-51190	11	15
119717-51200	11	16
119717-51300	11	43
119717-51330	11	46
119717-51420	11	51
119717-51480	11	92
119717-51490	11	93
119717-51570	11	70
119717-61050	12	2
119717-61060	12	3
119717-61070	12	4
119717-61120	12	15
119717-61130	12	16
119717-61140	12	17
119717-61150	12	18
119717-61201	12	5
119717-61400	12	21
119717-61500	12	40
119717-77800	4	56
119718-61441	12	31
119718-61700	12	124
119734-01590	2	3
119734-77330	16	19
119740-42350	10	17
119740-61560	12	91
119802-03100	4	38
119802-03110	4	39
119802-03121	4	40
119802-03131	4	41
119802-03141	4	42
119802-13620	6	4
119802-32130	2	15
119802-44570	10	41
119802-49010	10	43
119808-12540	5	2
119810-02941	1	34
119810-55340	14	8
119810-55650	14	12
119813-59950	13	34
119840-59570	13	32
119840-59601	14	18
119840-59611	14	20
119840-59621	14	21
119910-77200	16	2
119940-49020	10	44
119940-77270	16	18
119C10-42000	10	1 -1
119C10-42320	10	11 -1

Parts No. Index

Parts No.	Fig. No.	Ref. No.
121000-13201	6	7
	17	15
121250-44901	10	27
121257-55720	14	13
121257-55731	14	14
121450-42450	10	26
121450-44531	10	32
121468-44520	10	30
121470-44581	10	34
121520-34810	9	2
121522-42290	10	18
121550-49111	10	25
121850-51960	2	20
	17	5
122710-51090	11	8
124060-01050	1	4
124066-59100	13	30
124085-02220	3	4
124160-01751	2	28
	4	33
124160-01910	1	7
124450-44560	10	33
124465-44950	10	28
		29
	17	20
124550-51350	11	47
124766-59050	14	19
124950-21600	8	10
127694-91050	10	50
129001-32320	2	11
129001-32330	2	12
129005-59830	9	14
129008-61301	12	9
129052-55630	14	17
129052-61390	12	20
129053-55620	14	6
129100-01580	3	1
	8	2
129100-35140	9	3
129100-51560	11	69
129100-51570	11	71
129100-52200	11	97
129100-61650	12	69
129107-44590	10	37
129107-55510	14	9
129136-66852	16	30
129150-11230	4	27
129150-11750	4	29
129150-25301	7	15
129150-49080	10	46

Parts No.	Fig. No.	Ref. No.
129150-49100	10	45
129150-59131	13	18
129155-51020	11	4
129155-51140	11	12
129155-51280	11	41
		42
	12	13
129155-51450	11	59
129155-51521	11	65
129155-51530	11	66
129155-51540	11	67
129155-51550	11	68
129155-51580	11	73
129155-51591	11	74
129155-51600	11	20
129155-52051	11	96
129155-61341	12	10
129155-61450	12	32
129155-61460	12	11
129155-61480	12	34
129155-77925	16	37
129156-61460	12	33
129209-61370	12	19
129209-61920	12	81
129209-61930	12	133
129209-61970	12	134
129211-77920	16	38
129255-61410	12	28
129350-49530	10	22
129400-92410	17	23
129457-44760	10	20
129486-07901	4	54
129486-61540	12	59
129508-11180	4	14
129795-01900	16	1
129900-32130	2	10
129901-11450	4	1
	17	8
129901-53800	13	4
129901-59560	13	28
	17	21
129916-49740	10	12
129972-77341	16	20
158552-61700	12	70
158552-61710	12	74
158552-61900	12	80
158600-51170	11	14
158600-51270	11	40
158600-51410	11	50
158600-51420	11	52

Parts No.	Fig. No.	Ref. No.
158600-51442	11	53
158600-51570	11	72
158600-51790	11	79
158601-61710	12	125
171051-92760	17	26
174307-51700	12	41
194155-52160	16	27
194215-52110	16	22
198072-04320	14	4
22190-080002	9	15
		17
	17	17
22190-100002	12	82
22190-120002	12	83
	13	40
	14	3
	17	22
22190-160002	3	11
	11	80
	17	7
22217-060000	11	81
22217-120000	11	82
22242-000120	4	30
22252-000220	8	21
22272-000030	12	76
22351-050010	11	83
22351-060012	4	18
22372-040000	12	84
22512-040120	8	5
22857-500100	4	47
		48
22857-500160	4	49
23000-060000	5	7
23010-038000	10	51
23065-070130	10	35
23414-080000	10	14
	17	19
23414-120016	12	136
23857-030000	9	16
23876-005000	4	10
23876-030000	2	6
23887-100002	12	85
24101-060034	11	84
24101-063034	11	85
24104-062010	16	11
24311-000320	2	29
	4	50
	17	6
24311-240100	14	16
24316-000150	11	86

Parts No.	Fig. No.	Ref. No.
24341-000070	12	77
26014-060122	10	40
26022-050122	11	87
26022-060162	11	88
26106-050102	11	89
26106-060102	9	11
	12	78
		79
		86
26106-060122	2	21
	3	12
	7	8
26106-060142	12	87
26106-060162	2	22
26106-060202	4	51
	12	88
26106-060252	3	13
26106-060352	7	13
26106-060402	2	23
		24
26106-060452	3	14
	10	21
	12	89
26106-060602	2	25
26106-060652	2	26
26106-060752	4	52
26106-080122	10	15
26106-080142	4	55
26106-080202	10	24
	16	21
26106-080402	4	32
26106-080502	10	16
26106-100252	15	35
26106-100452	16	1 -1
26206-100252	3	5
26206-100302	3	6
26306-080002	2	27
	6	6
26306-100002	16	17
26577-060122	10	9
26716-060002	11	90
26716-120002	11	91
26756-060002	12	90
26979-050162	4	31
27241-120000	1	13
27241-250000	10	10
719415-01561	1	1
719415-92740	17	1
719440-51450	11	1
719717-02901	1	28

Parts No. Index

Parts No.	Fig. No.	Ref. No.
719717-02911	1	31
719734-01500	2	4
977770-1207F	17	24
X0280210331	15	23
X0280335360	15	33
X0280626010	15	12
X0280996180	15	3
X0281007680	15	2
X0282005871	15	6
X0283006960	15	7
X0284105040	15	13
X0284525010	15	27
X0285007030	15	10
X0285105190	15	4
X0285205030	15	5
X0286105010	15	15
X0286305010	15	17
X0286355010	15	18
X0287405140	15	19
X0534007800	15	20
X1289510130	15	34
X2A07075KB	16	4
X2A10592KA	16	3
X3A02982KC	16	5
X3A08863KA	16	15
X4284001590	15	8
X4A10092KA	16	6
X9055715000	15	21
X9490065670	15	32
X9490138090	15	25
X9490138100	15	26
X9490138110	15	24
X9490423520	15	30
X9490560750	15	29
X9490562360	15	28
X9490721360	15	22
X9491034320	15	16
X9491034330	15	14
X9491040990	15	11
X9491050100	15	9
XM069000000	16	8
XM219230000	16	13
XM771860000	16	9
XM771870000	16	16
XM860250000	16	14
XM863720000	16	12
XYSPS400800	16	7

Parts No.	Fig. No.	Ref. No.

Parts No.	Fig. No.	Ref. No.

Parts No.	Fig. No.	Ref. No.